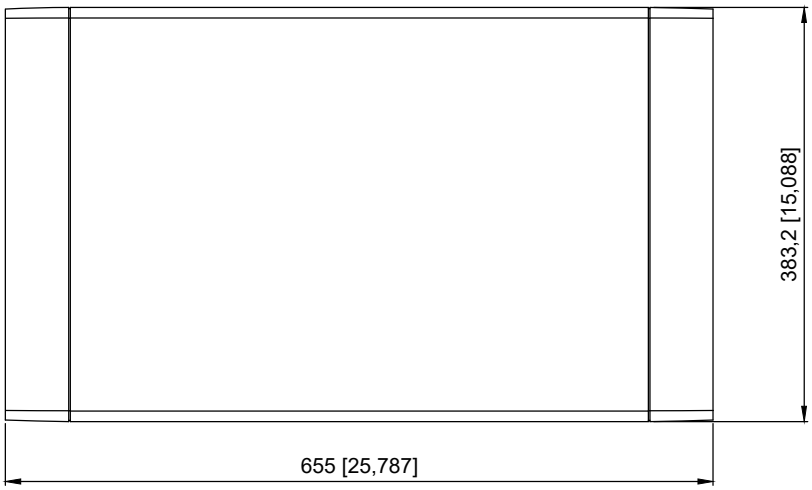

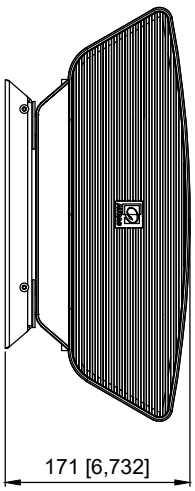

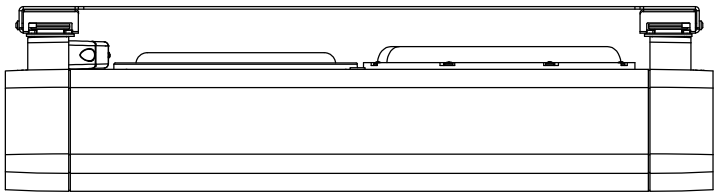

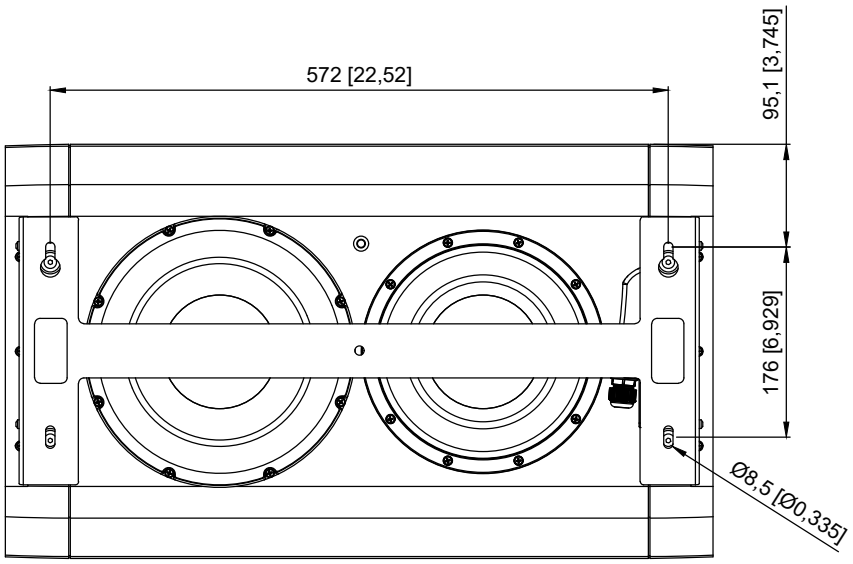

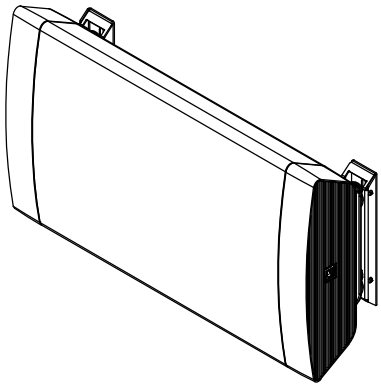

AUDAC	ARCHI8X	Product description: ULTRA-COMPACT 8" SUBWOOFER - 250W AES / 8 OHM				
	MM [INCH]	Scale: 1 : 7	Outer dimensions (w x h x d): 655 x 383,2 x 171 mm / 25,787 x 15,088 x 6,732 "	Unit height: N/A	Weight: 11,5 kg / 25,35 lbs	